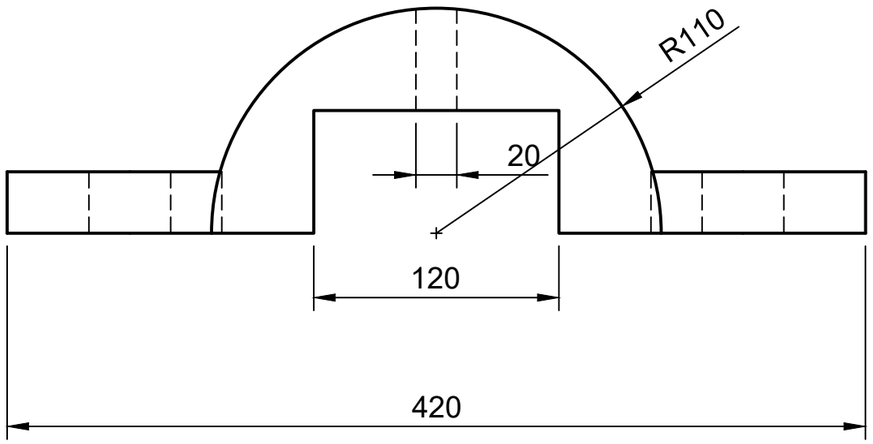

FRONT VIEW

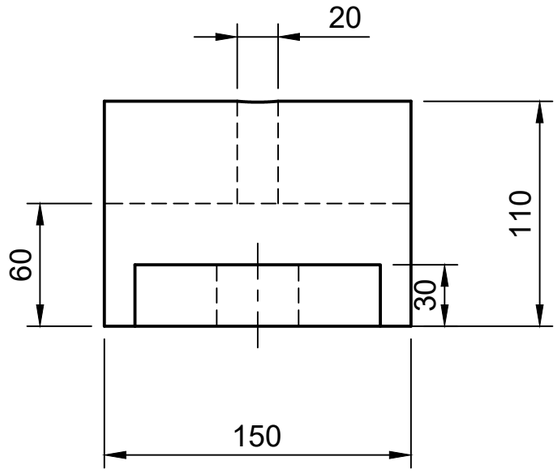

SIDE VIEW

Parts List			
Item	Part Name	Material	Mass
1	Exp no: 6	Steel	18392.482 g

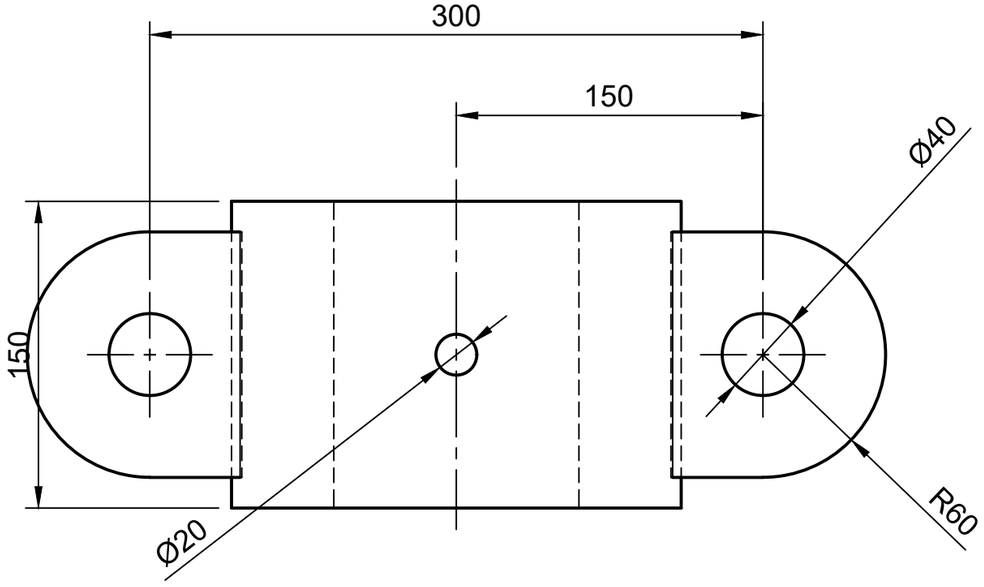

TOP VIEW

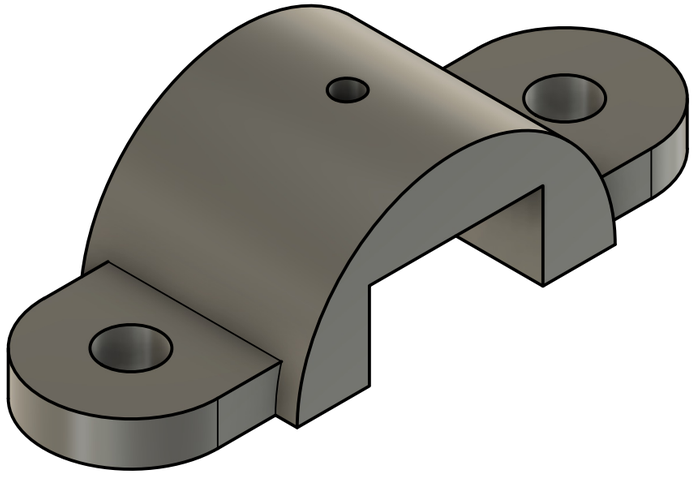

Dept.	Technical reference	Created by	Approved by
IT	212225220086	RITIKA S	Dr SARAVANAN MP
		Document type	Document status
		Title: 6- CREATE A SOLID 3D MODEL FROM ORTHOGRAPHIC PROJECTION	DWG No.
			Rev. 3.2 / Date of issue 12-02-2026 / Sheet 6/11